CASE FINISH	CURRENT (AMPS)	WORKING VOLTAGE				MAXIMUM DC RESISTANCE (OHMS)	MAXIMUM VOLTAGE DROP		MINIMUM CAPACITANCE (uF)	MIN. INSERTION LOSS PER MIL-STD-220, FULL LOAD, +25°C													
		-55°C TO +85°C		-55°C TO +125°C																			
		AC	DC	AC	DC		DC	AC		14 KHz	30 KHz	50 KHz	75 KHz	100 KHz	150 KHz	300 KHz	500 KHz	1 MHz	10 MHz	100 MHz	1 GHz	2 GHz
SOLDER	3	---	---	125@400Hz	150	0.02	0.06	0.15	0.25	--	--	--	--	--	8	15	--	30	68	--	70	70

PART MARKING:

M15733/26-0004
C OLSP2 DATE CODE
125VAC 400Hz
150VDC 3A 125°C
51-353-078

PACKAGE MARKING
STANDARD

MARKING NOTES:
N/A

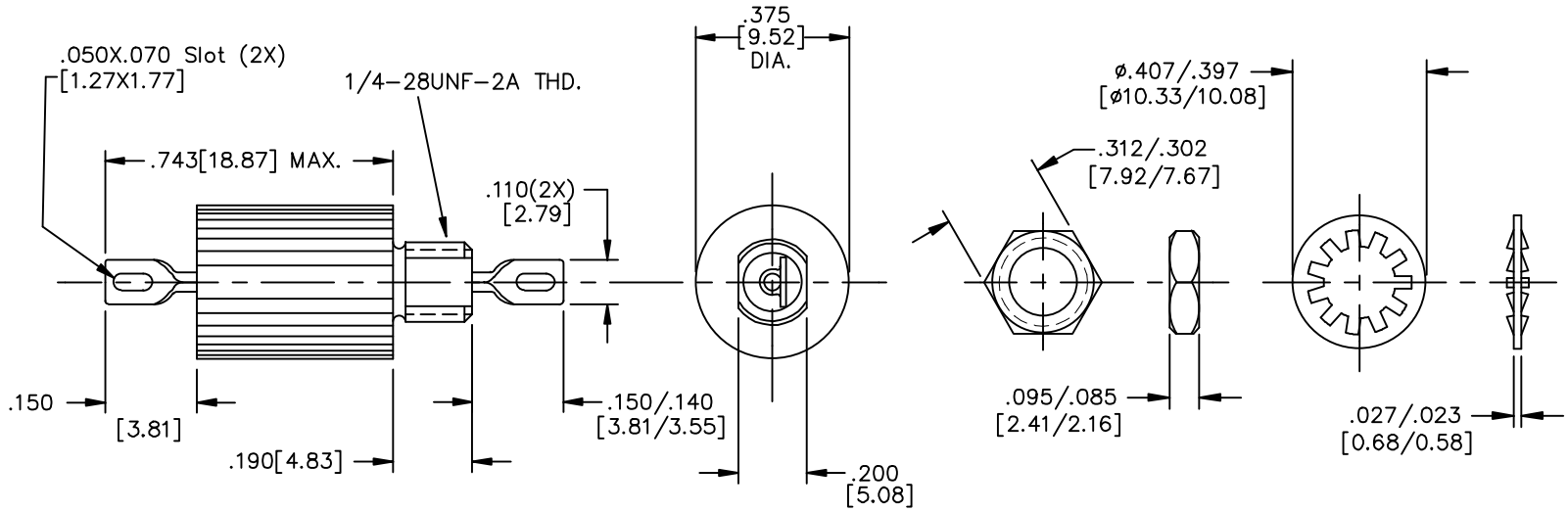

MTG. HARDWARE

SCHEMATIC

20 THIS PART IS CODED "NCA". SPECTRUM CONTROL, INC. DOES NOT HAVE CHANGE AUTHORITY. CUSTOMER APPROVAL REQUIRED BEFORE PRODUCT/PROCESS CHANGES CAN BE MADE.

NOTES:
1) MOUNTING TORQUE NOT TO EXCEED 7in-lbs.

REV. NO.	CHANGE NOTICE
20	CN 59169-ENG
19	CN 25632-CPD
18	CN 182331 REDRAWN

UNLESS OTHERWISE SPECIFIED DIMENSIONS ARE IN INCHES [MILLIMETERS]
DO NOT SCALE
THIRD ANGLE PROJECTION

TOLERANCES UNLESS OTHERWISE SPECIFIED
Fractions ±
Dec. .xx±
Dec. .xxx± .010 [.25]
Angles ±0° 30'
CODE IDENT. NO. OLSP2

SPECTRUM CONTROL INC.
FAIRVIEW PENNSYLVANIA
Dwn. KAUFFMAN
Ckd. 5/20/97
Engr K.Wood
Sheet 1 of 1
Description Low Pass EMI Filter
51-353-078

Quality Products From The Specialists In Electro-Magnetic Compatibility